EMPIRE
COMFORT SYSTEMS

INSTALLATION INSTRUCTIONS AND OWNER'S MANUAL

Premium Vent-Free Universal Fireboxes

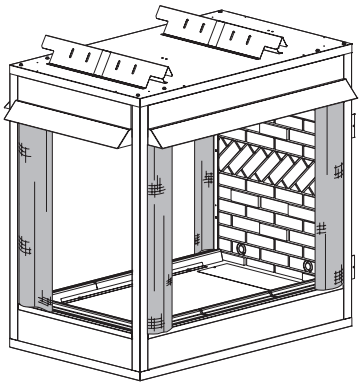

ANSI Z21.91 Ventless Fireplace Enclosures for use with any ANSI Z21.11.2 Gas Fired Decorative Type Unvented Room Heaters

WARNING: If the information in these instructions are not followed exactly, a fire or explosion may result causing property damage, personal injury or loss of life.

— **Do not store or use gasoline or other flammable vapors and liquids in the vicinity of this or any other appliance.**

— **WHAT TO DO IF YOU SMELL GAS**
- **Do not try to light any appliance.**
- **Do not touch any electrical switch; do not use any phone in your building.**
- **Immediately call your gas supplier from a neighbor's phone. Follow the gas supplier's instructions.**
- **If you cannot reach your gas supplier, call the fire department.**

— **Installation and service must be performed by a qualified installer, service agency or the gas supplier.**

DO NOT ATTEMPT TO MODIFY OR ALTER THE CONSTRUCTION OF THE FIREBOX OR ITS COMPONENTS. ANY MODIFICATION OR ALTERATION OF CONSTRUCTION MAY VOID THE WARRANTY OF THIS FIREBOX.

CHILDREN AND ADULTS SHOULD BE ALERTED TO THE HAZARDS OF HIGH SURFACE TEMPERATURE AND SHOULD STAY AWAY TO AVOID BURNS OR CLOTHING IGNITION.

YOUNG CHILDREN SHOULD BE CAREFULLY SUPERVISED WHEN THEY ARE IN THE SAME ROOM AS THE FIREBOX.

UNIVERSAL FIREBOX FOR ALL VENT-FREE LOG SETS

SEE-THROUGH FIREBOX MODELS:
VFP36SB2EL-2
VFP36SB2EF-2

PENINSULA FIREBOX MODELS:
VFP36PB2EL-2
VFP36PB2EF-2

GAS-FIRED

UL LISTED

NATIONAL FIREPLACE INSTITUTE® NFI CERTIFIED www.nficertified.org

We suggest that our gas hearth products be installed and serviced by professionals who are certified in the U.S. by the National Fireplace Institute® (NFI) as NFI Gas Specialists.

Installer: Leave this manual with the appliance.
Consumer: Retain this manual for future reference.

FOR USE ONLY WITH A LISTED GAS-FIRED UNVENTED DECORATIVE ROOM HEATER NOT TO EXCEED 40,000 BTU/H.

DO NOT BUILD A WOOD FIRE.

WARNING: Improper installation, adjustment, alteration, service or maintenance can cause injury or property damage. Refer to this manual. For assistance or additional information, consult a qualified installer, service agency or the gas supplier.

Carefully review the instructions supplied with the decorative type unvented room heater for the minimum fireplace size requirement.

DO NOT INSTALL A VENT-FREE LOG SET IN THIS FIREBOX, UNLESS THIS FIREBOX MEETS THE MINIMUM DIMENSIONS REQUIRED FOR THE INSTALLATION.

TABLE OF CONTENTS

SECTION	PAGE
Important Safety Information	3
Introduction	3
Clearances	4 - 5
Firebox Installation Instructions	6 - 8
Installing Hood	8 - 9
Gas Line Connection	9
Wiring Instructions for Installing a Dual Switch / Receptacle	10
LK2 Accent Light Accessory	10
Optional Single Speed Blower Installation Instructions	11 - 13
Maintenance	13
Parts List	14
See-Through Firebox Parts View	15
Peninsula Firebox Parts View	16
Accessories	17 - 18
How To Order Repair Parts	18
Quick Reference	19 - 22
Service Notes	22-23

IMPORTANT SAFETY INFORMATION

The installation must conform with local codes or, in the absence of local codes, with the National Fuel Gas Code, ANSI Z223.1 (latest edition) and to the National electrical Code, ANSI/NFPA70 (latest edition).

NOTE: Installation and repair should be done by a qualified service person. The appliance should be inspected before use and at least annually by a qualified service person. More frequent cleaning may be required due to excessive lint from carpeting, bedding material, etc. It is imperative that control compartment, burners and circulating air passageways of the appliance be kept clean.

Any safety screen or guard removed for servicing an appliance must be replaced prior to operating the appliance. Provide adequate combustion and ventilation air.

The flow of combustion and ventilation air MUST NOT be obstructed.

Provide adequate clearance around air openings into the combustion chamber and adequate accessibility clearance for servicing and proper operation. NEVER obstruct the front opening of the appliance.

This Empire Comfort Systems Inc. firebox and its components have been tested and will operate safely when installed in accordance with this installation manual. Read all instructions before starting installation, then follow these instructions carefully during installation to maximize firebox benefit and safety. Report to your dealer any parts damaged in shipment.

The Empire Comfort Systems Inc. warranty will be voided by, and Empire Comfort Systems Inc. disclaims any responsibility for the following actions:

- **Installation of any damaged firebox.**
- **Modification of the firebox or any of the components parts thereof.**
- **Installation other than as instructed by Empire Comfort Systems Inc.**
- **Installation and/or use of any component part or accessory not approved by Empire Comfort Systems Inc. in combination or assembly with a Empire Comfort Systems Inc. firebox, not withstanding any independent testing laboratory or other third party approval of such component part or accessory.**

Any such action may create a possible fire hazard. Consult your local building codes.

Firebox Screen.
The firebox screen must be in place when the firebox is operating.

INTRODUCTION

Instructions to Installer

1. Installer must leave instruction manual with owner after installation.
2. Installer must have owner fill out and mail warranty card supplied with firebox.
3. Installer should show owner how to start and operate log set that is installed into firebox.

Important

All correspondence should refer to complete Model Number, Serial Number.

Notice: During initial firing of this firebox with a log set installed, its paint will bake out, and smoke will occur. To prevent triggering of smoke alarms, ventilate the room in which the unit is installed.

Qualified Installing Agency

Installation and replacement of gas piping, gas utilization equipment or accessories and repair and servicing of equipment shall be performed only by a qualified agency. The term "qualified agency" means any individual, firm, corporation or company which either in person or through a representative is engaged in and is responsible for (a) the installation or replacement of gas piping or (b) the connection, installation, repair or servicing of equipment, who is experienced in such work, familiar with all precautions required and has complied with all the requirements of the authority having jurisdiction.

State of Massachusetts: The installation must be made by a licensed plumber or gas fitter in the Commonwealth of Massachusetts. The state of Massachusetts requires that a flexible appliance connector cannot exceed three feet in length.

Sellers of unvented propane or natural gas-fired supplemental room heaters shall provide to each purchaser a copy of 527 CMR 30 upon sale of the unit.

In the State of Massachusetts, unvented propane and natural gas-fired space heaters shall be prohibited in bedrooms and bathrooms.

The installation must conform with local codes or, in the absence of local codes, with the National Fuel Gas Code, ANSI Z223.1/NFPA 54.*

*Available from the American National Standards Institute, Inc., 11 West 42nd St., New York, N.Y. 10036.

CLEARANCES

Sidewall Clearances: The clearance from the inside of the firebox to perpendicular combustible side wall should not be less than 1 3/4". **See Figures 1a and 1b.**

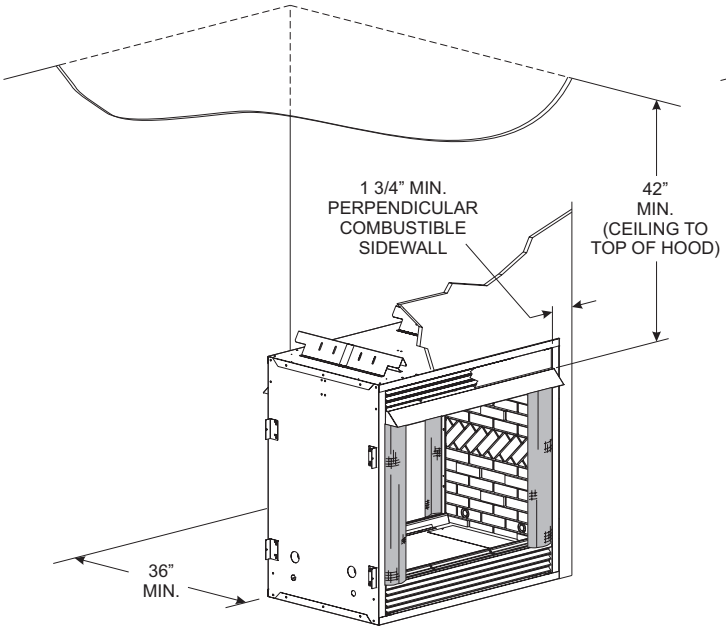

Figure 1a - See Through Firebox Clearances

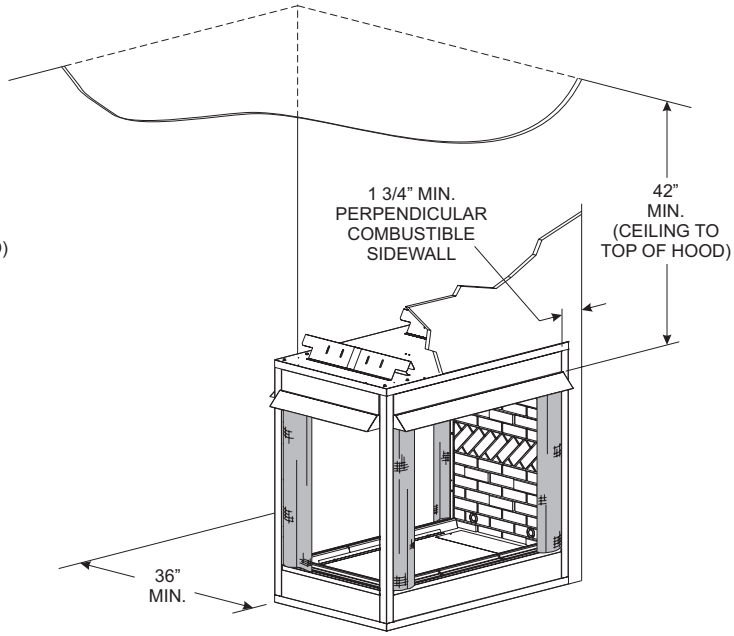

Figure 1b - Peninsula Firebox Clearances

Combustible material clearance from front of firebox: 36" minimum

Firebox Side and Back Clearances: The firebox outer casing side(s) require a minimum 1/2" clearance to combustibles.

Top Framing and Finishing: Combustible framing may rest on top of standoffs. Combustible finishing materials may extend to the top standoff screws on the front edge of the top outer wrap. **See Figures 2a and 2b**.

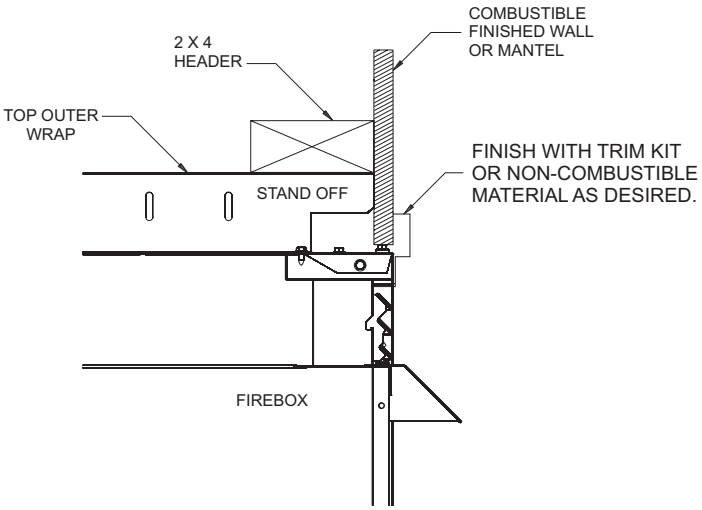

Figure 2a - Louvered Models

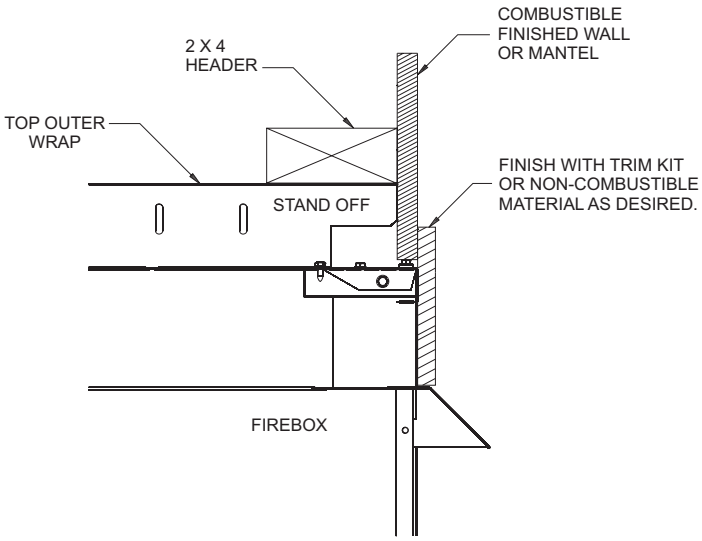

Figure 2b - Flush Models

CLEARANCES

Ceiling Clearances: The ceiling height should not be less than 42" from the top of the hood. **See Figures 3a and 3b.**

Mantel Clearances: Vent free firebox models must use the hood supplied with the firebox, or one of the optional hood kits available for each model. If a combustible mantel is installed, it must meet the clearance requirements detailed below.

Grate Clearance: The minimum clearance between the front legs of the grate and the front edges of the firebox is 1 1/2".

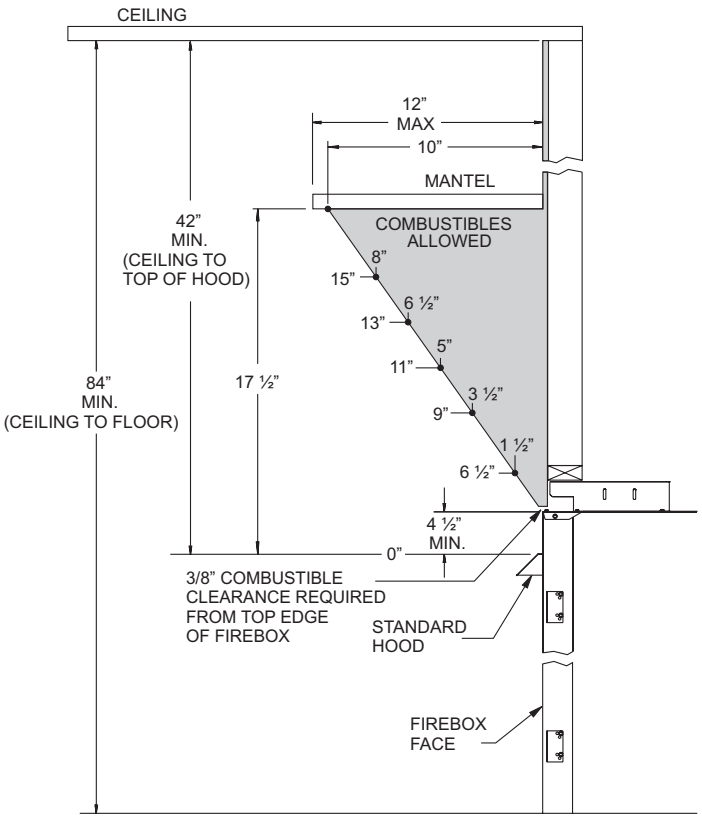

Figure 3a - Mantel Clearances with Standard Hood

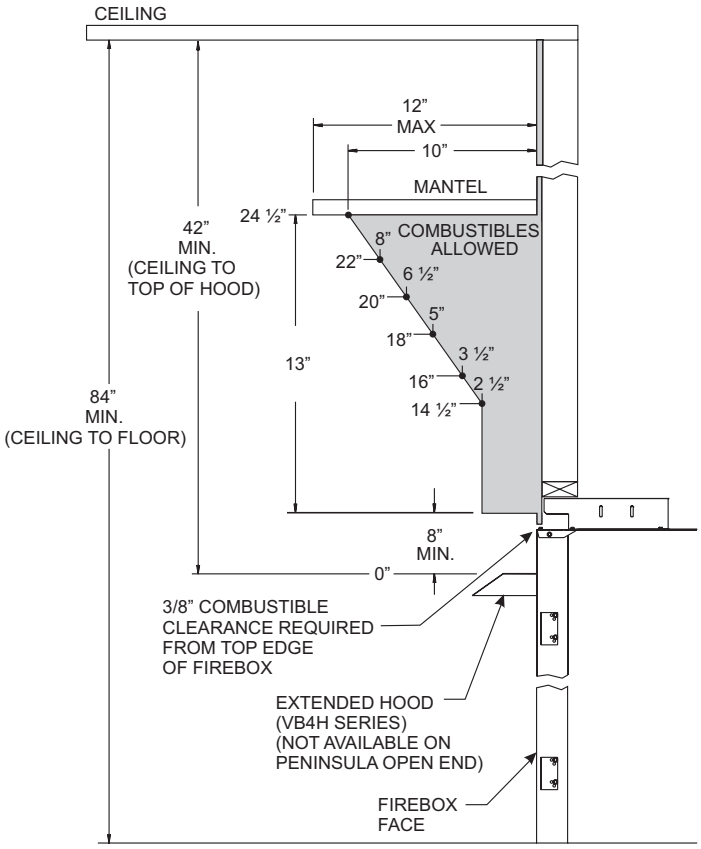

Figure 3b - Mantel Clearances with Optional Extended Hood

FIREBOX INSTALLATION INSTRUCTIONS

Any vent-free Gas Log Heater must be "For use with approved ANSI Z21.11.2 unvented room heater."

Follow and complete the installation instructions of the gas log set and the requirements of this firebox.

Check all fittings for leaks before lighting the gas log set.

In planning the installation for the firebox, it is necessary to determine where the unit is to be installed and whether optional accessories are desired. Gas supply piping should also be planned at this time.

A gas shut off must be in this line.

The firebox can be mounted on any of these surfaces:

1. A flat hard combustible or non-combustible surface.
2. A raised platform of combustible or non-combustible material.
3. Recessed into the floor as illustrated by **Figure 4**.
4. Supported under all (4) corners of the firebox so that contact is made on all four perimeter edges on the bottom of the unit (Example: Four (4) concrete masonry blocks).

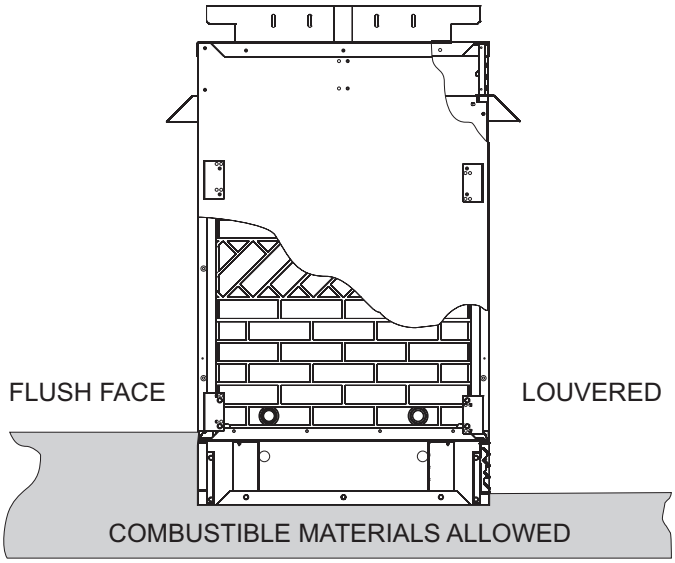

Figure 4

If the firebox is installed directly on carpeting, tile or other combustible material other than wood flooring, it should be installed on a metal or wood panel extending the full width and depth of the unit.

At this point, you should have decided what components to include in your installation, and where the firebox is to be located. If this has not been done, stop and consult your dealer for assistance with this planning.

Planning Your Installation

Accessory kits such as the FBB5 Blower kit, Trim kits, Mantles, plus other Decorative Frame, Hood, and Door accessory kits may be installed after the firebox is secured to the framing.

Refer to the instructions provided with each of the optional accessory kits for proper installation and operation.

Firebox Framing

Firebox framing can be built before or after the firebox is set in place. Framing should be constructed to accommodate wall covering and firebox facing material. The firebox framing should be constructed of 2 x 4 lumber or heavier. The framing headers may rest on the top of the firebox standoffs. Refer to **Figure 5** for firebox framing dimensions.

Note: On Peninsula models, a maximum weight of 250 lbs. is recommended when construction materials are supported by the top standoff spacers.

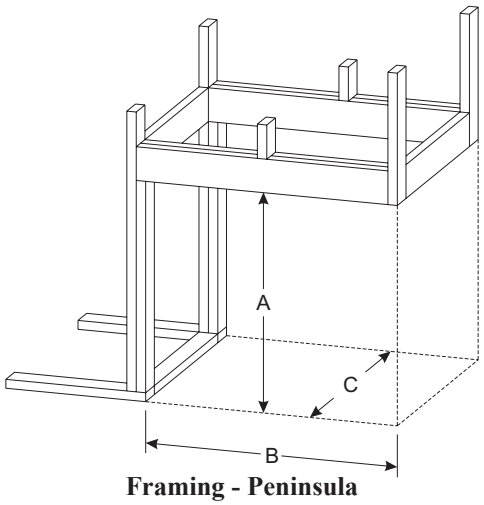

Framing - Peninsula

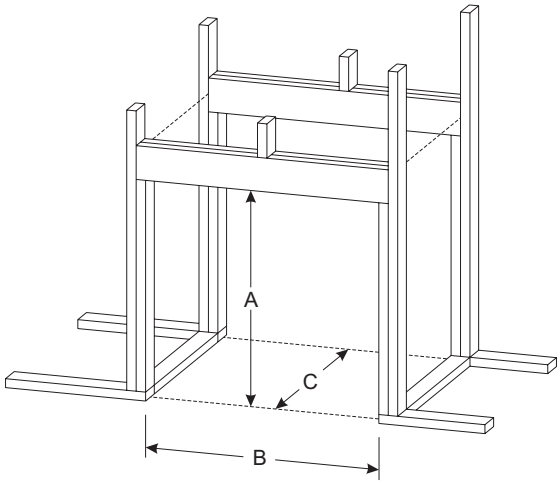

Framing - See-Through

Premium Vent-Free Firebox Framing Dimensions (in inches)			
	"A"	"B"	"C"*
Model	Framing Height	Framing Width	Framing Depth
VFP36SB	41 1/2"	40"	23"*
VFP36PB	41 1/2"	39"**	23"*

Attention: Add height of base to "A" Dimension when elevating firebox if installing on an elevated base.

Framing dimension A incudes a three inch clearance for standoffs on firebox.

*Dimension "C" assumes use of 1/2" wall board flush to both front faces.

** Peninsula model framing width assumes use of 1/2" wall board flush to the end face.

Figure 5

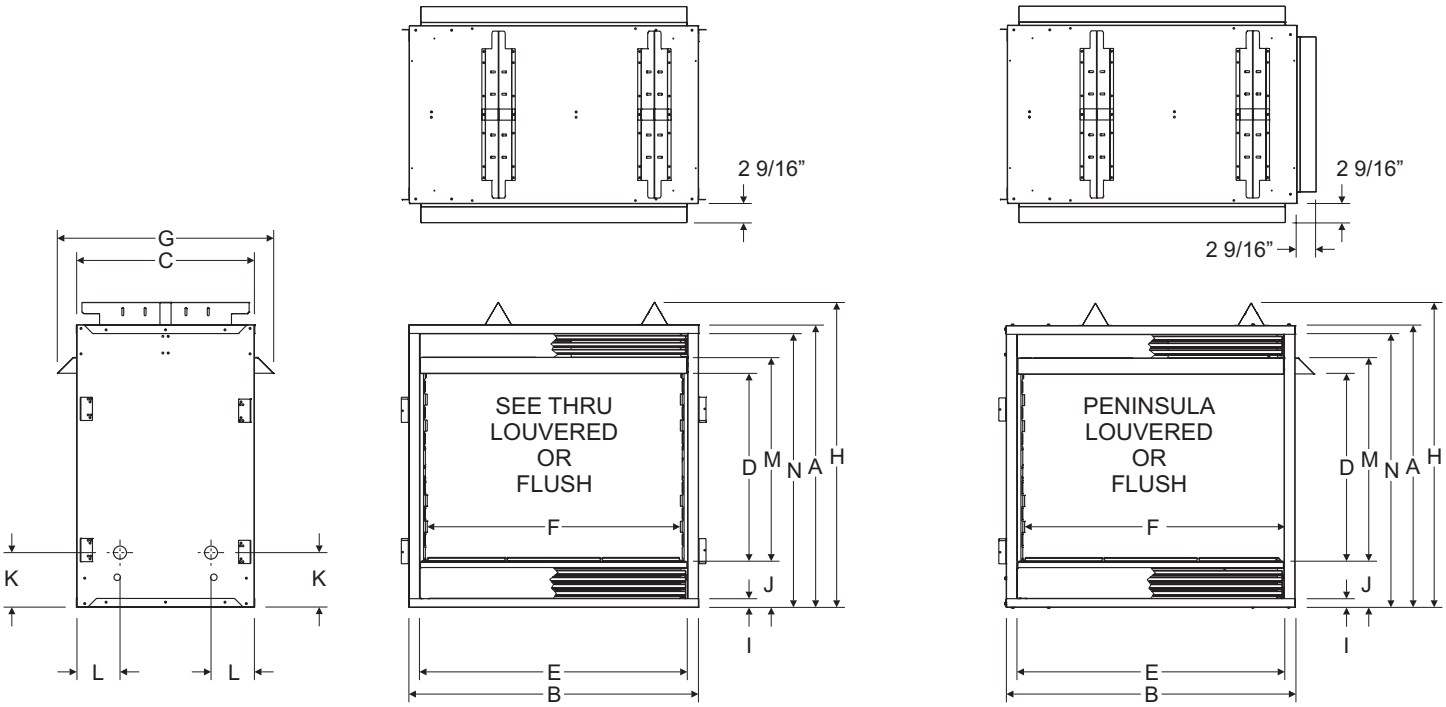

	LOUVERED PANELS		FLUSH PANELS	
	VFP36SB	VFP36PB	VFP36SB	VFP36PB
A	38 1/8"	38 1/8"	38 1/8"	38 1/8"
B	39"	39"	39"	39"
C	24"	24"	24"	24"
D	25 1/2"	25 1/2"	25 1/2"	25 1/2"
E	36"	36"	36"	36"
F	34 1/4"	35 1/4"	34 1/4"	35 1/4"
G	29 1/8"	29 1/8"	29 1/8"	29 1/8"
H	41 1/8"	41 1/8"	41 1/8"	41 1/8"
I	1 1/4"	1 1/4"	1 1/4"	1 1/4"
J	6 1/8"	6 1/8"	6 1/8"	6 1/8"
K	8 1/2"	8 1/2"	8 1/2"	8 1/2"
L	6"	6"	6"	6"
M	27 5/8"	27 5/8"	27 5/8"	27 5/8"
N	36 7/8"	36 7/8"	36 7/8"	36 7/8"

Figure 6
Firebox Dimensions

FIREBOX INSTALLATION INSTRUCTIONS (continued)

Locating Firebox

Place firebox in framed opening. Attach the framing brackets to the firebox and secure firebox to framing. Different hole locations can be used for finishing materials with thicknesses of 3/8", 1/2" and 3/4". Secure the brackets with screws provided using two (2) per framing bracket. **See Figure 7.**

Framing brackets should fit directly against framing material. Use at least one (1) nail or screw per bracket to secure in place.

IMPORTANT! Check squareness of the firebox prior to securing to framed opening. **See Figure 8.**

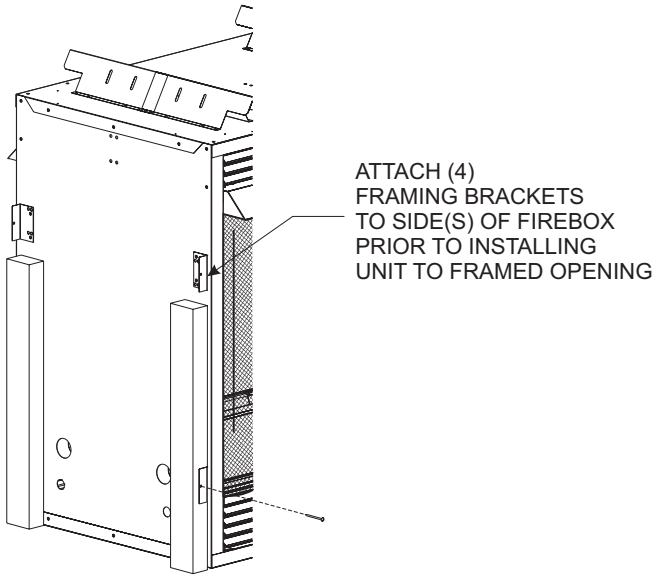

Figure 7

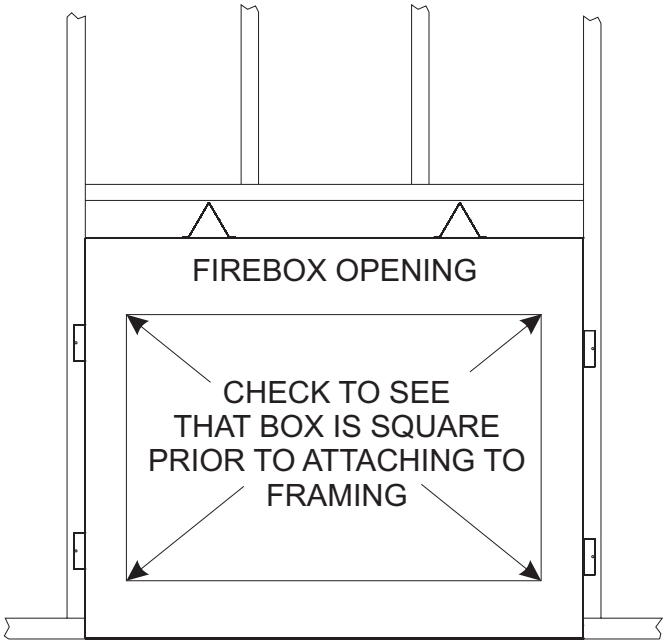

Figure 8

INSTALLING HOOD

Black hoods are furnished with each firebox (or the optional hood(s)) and MUST be installed before the firebox is used. Failure to do so may create a possible fire hazard. For shipping purposes, the hoods are located behind the upper louver(s), or inside the firebox on flush face units. If brass, stainless steel, or hammered pewter hoods are desired, they can be purchased as an option. Attachment is the same as the standard black hood.

Louvered Models

1. Remove upper louver, or flush panel.
2. Place the top hood flange on top of the inner firebox top, then install three screws through the firebox top from below and screw into the pilot holes in the hood flange (B).
3. Install one (1) screw at each end of the hood as shown (C).
4. Re-install louver(s) or flush panel(s).

Caution: All hoods must be installed prior to operation of appliance. **See Figure 9.**

Louvered Models

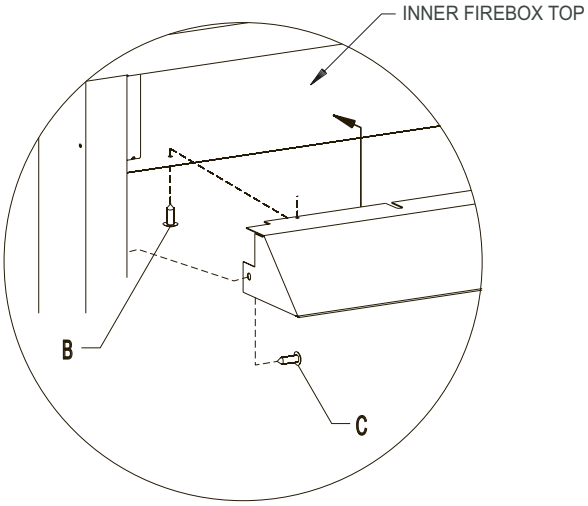

Figure 9

INSTALLING HOOD (continued)

Extended Hoods

If your non-combustible facing material is over 1" in thickness and will be used to finish this firebox, extended hoods are available that will extend out 2" farther into the room. Extended hoods are not available for the peninsula open ends. Contact your local dealer for details.

Extended Hoods	
VB4H36BL	Standard Black (1 each)
VB4H36BR	Polished Brass (1 each)
VB4H36SS	Stainless Steel (1 each)
VB4H36HP	Hammered Pewter (1 each)

Finishing

All joints (top, bottom and sides), where the wall or decorative facing material meets the firebox surround should be sealed with a non-combustible material.

Hearth extensions are required for these fireboxes.

Flush panels, louvers, and decorative louver panels are interchangeable, and may be mixed and matched as desired (i.e. Flush panel on bottom with louvered panel at top, or vice versa).

GAS LINE CONNECTION

The firebox is designed to accept a gas line for an approved vent-free gas logset. Have the line installed by a qualified service person in accordance with all building codes. Consult local building codes to properly size the gas supply line leading to the connection of the logset burner. The state of Massachusetts requires that a flexible appliance connector cannot exceed three feet in length.

Gas access holes are provided through the side panel(s) of the firebox. **See Figure 10**. Carefully remove the indented knockout in the ceramic brick panel using a drill or utility knife. **See Figure 11.**

Check gas type. Use only the gas type indicated on the gas log set rating plate. If the gas listed on the plate is not your type of gas supply, DO NOT INSTALL. Contact your dealer for proper model.

Always use an external regulator for all LP fireboxes to reduce the supply tank pressure to a maximum of 14" w.c. This is in addition to the regulator fitted to the log set.

WARNING: CONNECTION DIRECTLY TO AN UNREGULATED L.P. TANK CAN CAUSE EXPLOSION.

Install only a ANSI Z21.11.2 vent-free log set into this firebox.

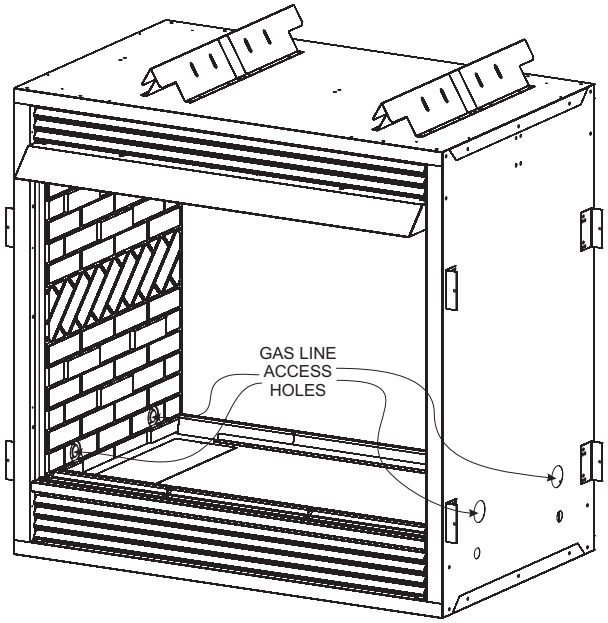

Figure 10

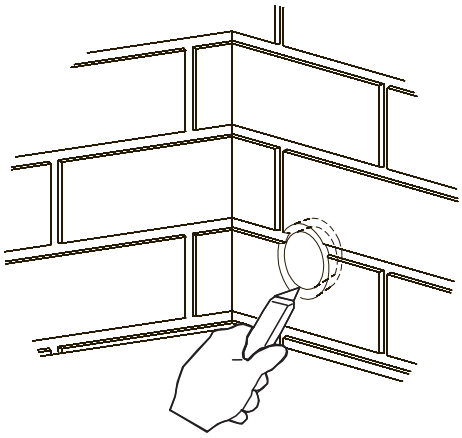

Figure 11

WIRING INSTRUCTIONS FOR INSTALLING A DUAL SWITCH / RECEPTACLE

In order to install both the optional Blower and Accent Light accessories, it will be necessary to install the junction box so that the Duplex Receptacle wiring is split. This will allow each side of the receptacle to operate independently off separate wall switches. See diagram below.

Note: To operate the FBB5 Blower accessory with a variable speed control, the SCV1 Variable Speed Control Kit should be installed to control the power to one side of the duplex receptacle.

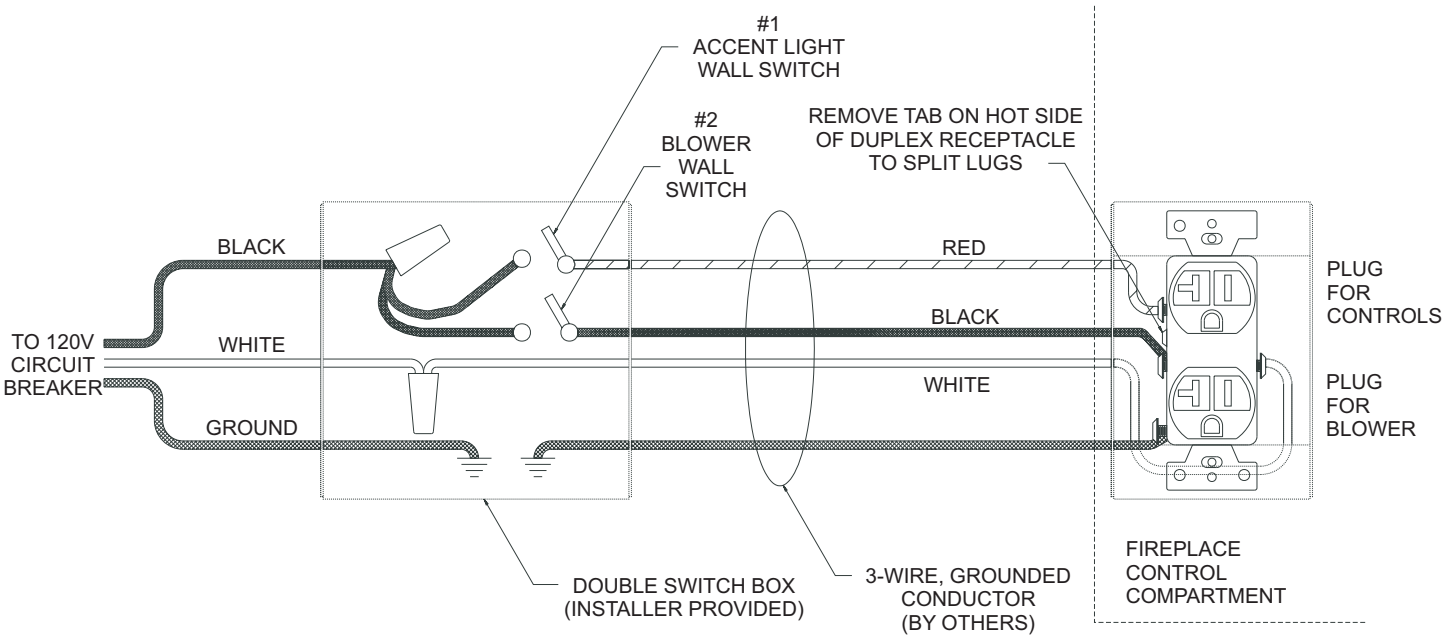

DUAL SWITCH ELECTRICAL WIRING TO FIREPLACE RECEPTACLE

1. To wire Junction Box Receptacle, remove the tab on the side of the receptacle (hot side) to split receptacle. This will be required to separate blower and Accent Light circuits.
2. Power for switched and live sides of Duplex Receptacle must come from the same power source. (One circuit breaker on main panel must switch all power off.)
3. From the wall box to the fireplace a 3-wire conductor with ground is recommended, however (2) two-wire conductors with grounds may be used in place of a 3-wire conductor with a ground if the black wires from the Accent Light and blower accessories are identified.
4. Two wall switches may be used to activate the two receptacle plugs independently.

Note: Wiring to the Junction Box should be run through the 7/8" diameter access hole located on one of the sides of the fireplace outer wall. A Romex type connector is provided and should be used to protect and restrain the wiring where it passes through the fireplace outer wall. The Junction Box should be positioned in the lower compartment of the fireplace/firebox so that it does not interfere with moving parts of the blower assembly. The Junction Box incorporates magnets on the bottom side to retain and reduce the chance of movement or vibration during blower operation.

Note: If only the blower option is to be installed, wiring may be performed as described and illustrated in the following Blower Installation section.

LK2 ACCENT LIGHT ACCESSORY

An Accent Light Kit model LK2 is available for installation in the top of the firebox. Providing the junction box has been prewired with separate circuits as described in the "Wiring for a dual switch/receptacle" section, the Accent Light kit may be installed at any time on louvered models, or on flush panel models prior to the upper panels being covered with finishing materials.

Follow the instructions provided with the LK2 Accent Light kit for proper installation in the fireplace/firebox.

OPTIONAL SINGLE SPEED BLOWER INSTALLATION INSTRUCTIONS

Attention: Install blower assembly before connecting gas inlet supply line.

Wiring

The appliance, when installed, must be electrically grounded in accordance with local codes or, in the absence of local codes, with the *National Electrical Code, ANSI/NFPA 70*, if an external electrical source is utilized. **This appliance is equipped with a three-prong [grounding] plug for your protection against shock hazard and should be plugged directly into a properly grounded three-prong receptacle. Do not cut or remove the grounding prong from this plug.** For an ungrounded receptacle, an adapter, which has two prongs and a wire for grounding, can be purchased, plugged into the ungrounded receptacle and its wire connected to the receptacle mounting screw. With this wire completing the ground, the appliance cord plug can be plugged into the adapter and be electrically grounded.

Caution: Label all wires prior to disconnection when servicing controls. Wiring errors can cause improper and dangerous operation. Verify proper operation after servicing.

Note: Junction box is to be located in the lower compartment of the firebox and must be pre-wired at time of firebox installation for use with blower assembly. A standard ON/OFF wall switch or optional SCV1 Variable Speed Control Kit should be installed to activate power to the Junction Box and provide power for the operation of the FBB5 Blower assembly. It is recommended that installation of the wiring be performed by a qualified electrician. **See Figures 12 and 13.**

1. If installed, turn OFF gas supply to firebox/gas log.
2. If applicable, turn OFF electric supply to firebox.
   CAUTION: ALL WIRING SHOULD BE DONE BY A QUALIFIED ELECTRICIAN AND SHALL BE IN COMPLIANCE WITH ALL LOCAL, CITY AND STATE BUILDING CODES. BEFORE MAKING THE ELECTRICAL CONNECTION, MAKE SURE THAT MAIN POWER SUPPLY IS DISCONNECTED. THE APPLIANCE, WHEN INSTALLED, MUST BE ELECTRICALLY GROUNDED IN ACCORDANCE WITH LOCAL CODES, WITH THE NATIONAL ELECTRICAL CODE ANSI/NFPA 70 (LATEST EDITION).

To install the blower kit, access the junction box, or install a light kit, remove the access cover plate and/or lower louvers or flush panels as illustrated by figures 13 and 14.

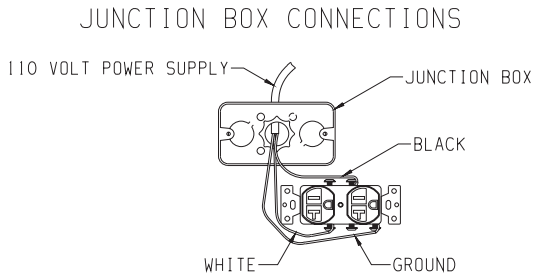

Figure 12

A factory included junction box is located on the lower right side of the firebox. Wiring must be fed through the 7/8" diameter hole provided on the lower side of the firebox, and secured to the outer wrap with the clamp provided. Leave approximately 6” of wire in the junction box for connection.

Attach black wire to one side of the receptacle and white wire to opposite side of receptacle. The ground wire should be attached to the green (ground) screw. **See Figure 12.**

Install the receptacle into the junction box as illustrated. Attach cover plate. Place Junction Box so that it is approximately 8 to 12" away from the outer wrap wall. Secure wiring at outer wrap of fireplace with wire clamp provided.

Attention: If installed, do not damage gas inlet supply line when blower assembly is inserted into firebox. In some cases, removal of the gas inlet supply line may be necessary.

3. Determine which type of firebox you have prior to installation. **See Figures 13 and 14**.

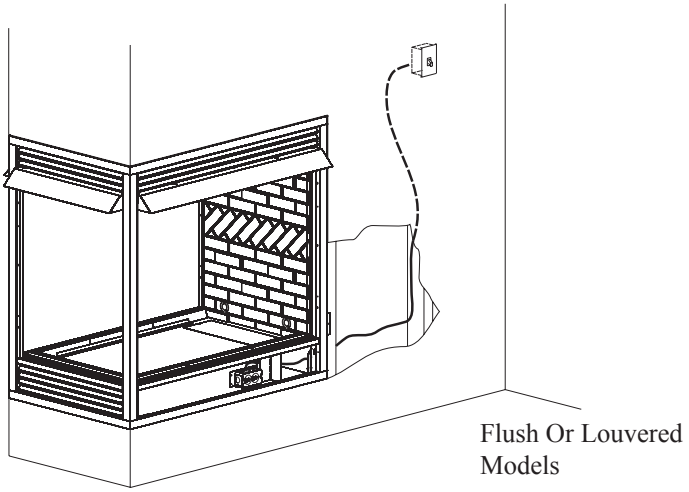

Figure 13

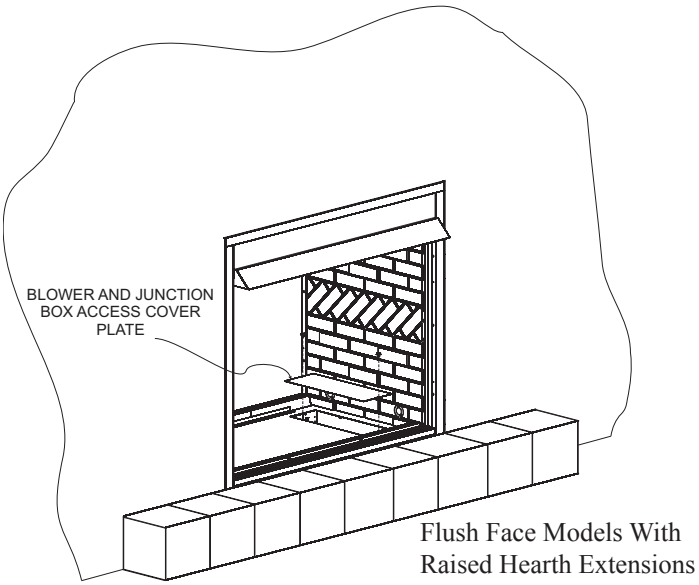

Figure 14

4. Insert blower assembly into interior, bottom of firebox. Position blower assembly so that you align the notch on back of blower assembly with the center screw on side/end panel, then push the blower assembly against firebox outer panel. The blower wheel must be centered with the side/end wall of the firebox. The magnets on the back and bottom of blower assembly will sufficiently hold blower assembly in place. **See Figure 16.**
5. Once the blower assembly is in position, locate the plug button in the top corner of the firebox. Remove the plug with a standard screwdriver and discard plug.
6. Next, find the fan control switch and wire assembly. Feed the wires through the hole at the top of the firebox. Feed the wires over the firebox top and down between the firebox side and outer wrap then, secure the fan control switch with (2) #6 screws provided. **See Figure 15.**

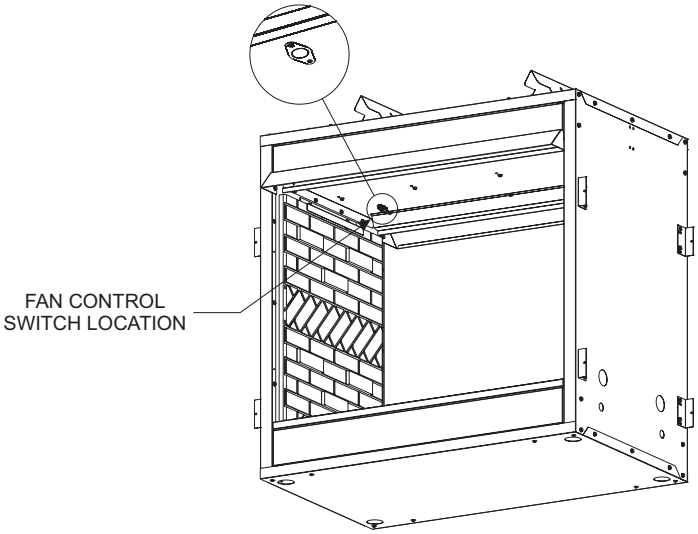

Figure 15

7. The fan control wires will slide down between the firebox and outer wrap near the blower assembly. **See Figure 16**.
8. One fan control wire will have a 1/4" female terminal that must be attached to the open terminal on the blower motor. **See Figure 19, Connection A.**
9. The other fan control wire has a 1/4" male terminal. Attach this terminal to the open terminal on the blower power cord. **See Figure 19, Connection B**
10. Route the wires away from moving parts of the blower assembly and retain wires together near the blower motor using the plastic purse clip provided.
11. To complete the installation, plug the power cord into the junction box receptacle previously installed in the bottom of the firebox. **See Figures 16 and 18.**
12. Once all connections are made electrically, it is recommended that you test the blower fan control operation by turning on power to the blower (Caution: 110 Volt). Then apply heat to the fan control switch inside the firebox with a lighter or match until blower is activated. Once blower is activated, check for proper operation. Do not place hands near blower assembly or other wiring while power is on.
13. Replace blower access plate and louvers or flush panels. **See Figures 13 and 14.**
14. This completes the installation of the optional FBB5 Blower kit accessory.

Note: This blower is equipped with a heat activated fan control switch. Blower will operate when the firebox warms up, and will turn off automatically when the firebox cools down. The time will vary for the activation of the fan control switch depending on several factors including firebox/log set sizing, BTU input variables, and log set positioning. Generally, it may take from 5 to 20 minutes to activate blower/fan control from a cold start.

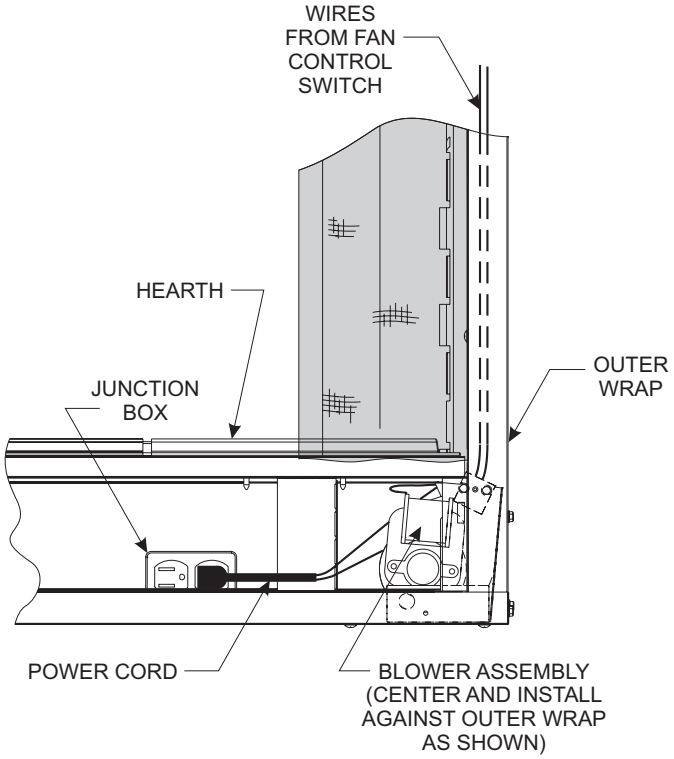

Figure 16

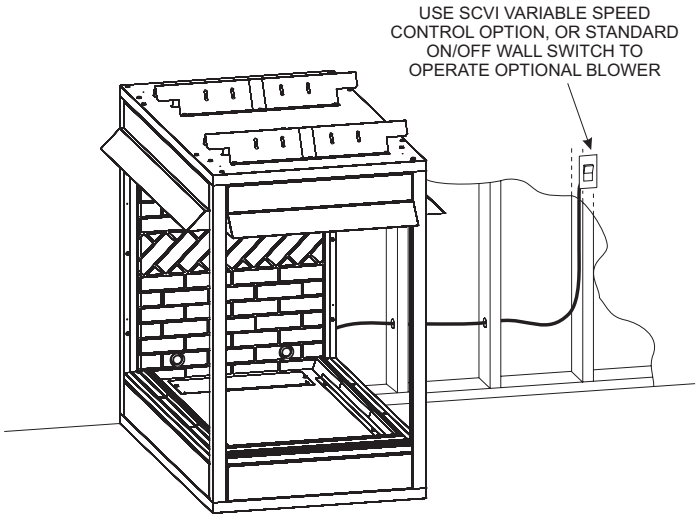

Figure 17

Blower Motor
The blower motor does not have oiling holes. Do not attempt to oil the blower motor.

Blower Wheels
The blower wheels will collect lint and could require periodic cleaning. If the air output decreases or the noise level increases, it indicates a dirty blower wheel. Remove fan and clean blower wheels.

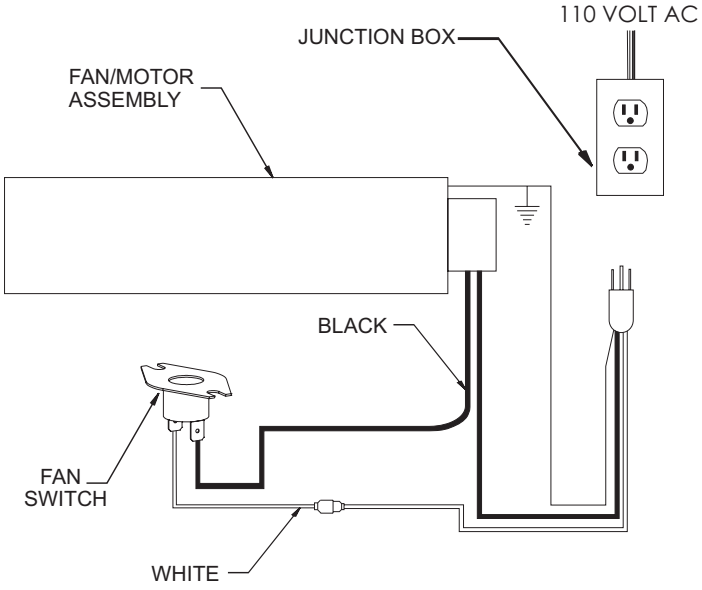

Figure 18

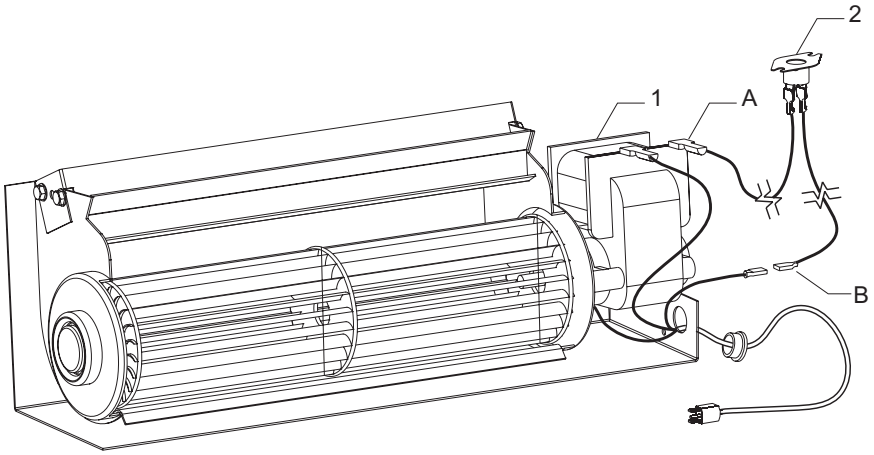

1	FBB5	BLOWER ASSEMBLY COMPLETE
2	R8199	FAN CONTROL SWITCH

Figure 19

MAINTENANCE

Keep the control compartment, logs and burner area surrounding the logs clean by vacuuming or brushing area at least twice a year.

THE LOGS CAN GET VERY HOT – HANDLE ONLY WHEN COOL.

Always turn off gas to the pilot before cleaning. For relighting, refer to lighting instructions located on the log set.

Never obstruct the flow of the combustion and ventilation air. Keep the front of the firebox clear of all obstacles and materials.

Screens must be closed during operation.

PARTS LIST

Index Number	Part Number				Description
	VFP36SB2EL	VFP36SB2EF	VFP36PB2EL	VFP36PB2EF	
1	-	-	-	-	FIREBOX ASSEMBLY
2	17149	17149	17149	17149	TOP STANDOFF
3	R9655	R9655	R9655	R9655	INSULATION - TOP
4	24067	24067	24067	24067	INSULATION SUPPORT
5	R7052	R7052	R7052	R7052	SCREEN ROD
6	-	-	R9633	R9633	SCREEN ROD
7	R9631	R9631	R9631	R9631	BRICK PANEL - SIDE BULK
8	19945	19945	19945	19945	BRICK LINER BRACKET
9	20145	20145	20145	20145	HOOD
10	-	-	24056	24056	PENINSULA HOOD
11	20073	20073	20073	20073	INNER AIR BAFFLE
12	18807	18807	18807	18807	LOUVER ASSEMBLY - UPPER
13	18808	18808	18808	18808	LOUVER ASSEMBLY - LOWER
14	-	-	24059	24059	UPPER LOUVER ASSEMBLY
15	-	-	24058	24058	LOWER LOUVER ASSEMBLY
16	19990	19990	19990	19990	BLOWER COVER PLATE
17	23004	23004	23004	23004	HEARTH RETAINER
18	R9293	R9293	R9293	R9293	HEARTH LEDGE - LEFT
19	R9295	R9295	R9295	R9295	HEARTH LEDGE - CENTER
20	R9292	R9292	R9292	R9292	HEARTH LEDGE - RIGHT
21	-	-	R9634	R9634	HEARTH LEDGE
22	10554	10554	10554	10554	NAILING FLANGE
23	-	24051	-	24051	FLUSH PANEL - UPPER - LONG
24	-	24052	-	24052	FLUSH PANEL - LOWER - LONG
25	-	-	-	24054	FLUSH PANEL - UPPER - SHORT
26	-	-	-	24053	FLUSH PANEL - LOWER - SHORT
27	19401	19401	19401	19401	BRICK LINER BRACKET - LOWER

See Page 15 for See-Through Models VFP36SB2E(L,F) Parts View for ordering parts.
See Page 16 for Peninsula Models VFP36PB2E(L,F) Parts View for ordering parts.

Use Only Manufacturer's Replacement Parts. Use of Any Other Parts Could Cause Injury Or Death.

SEE-THROUGH FIREBOX PARTS VIEW

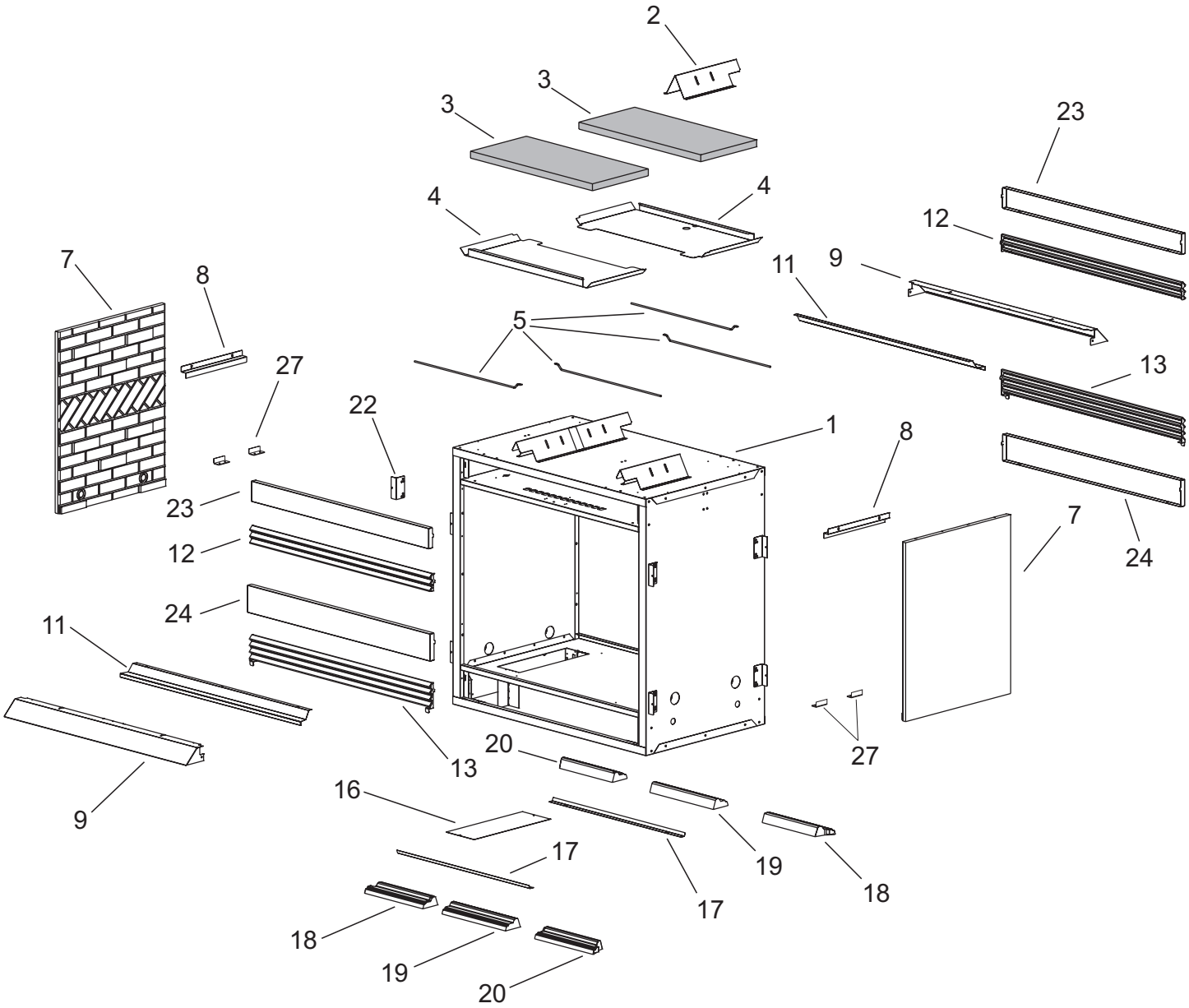

PENINSULA FIREBOX PARTS VIEW

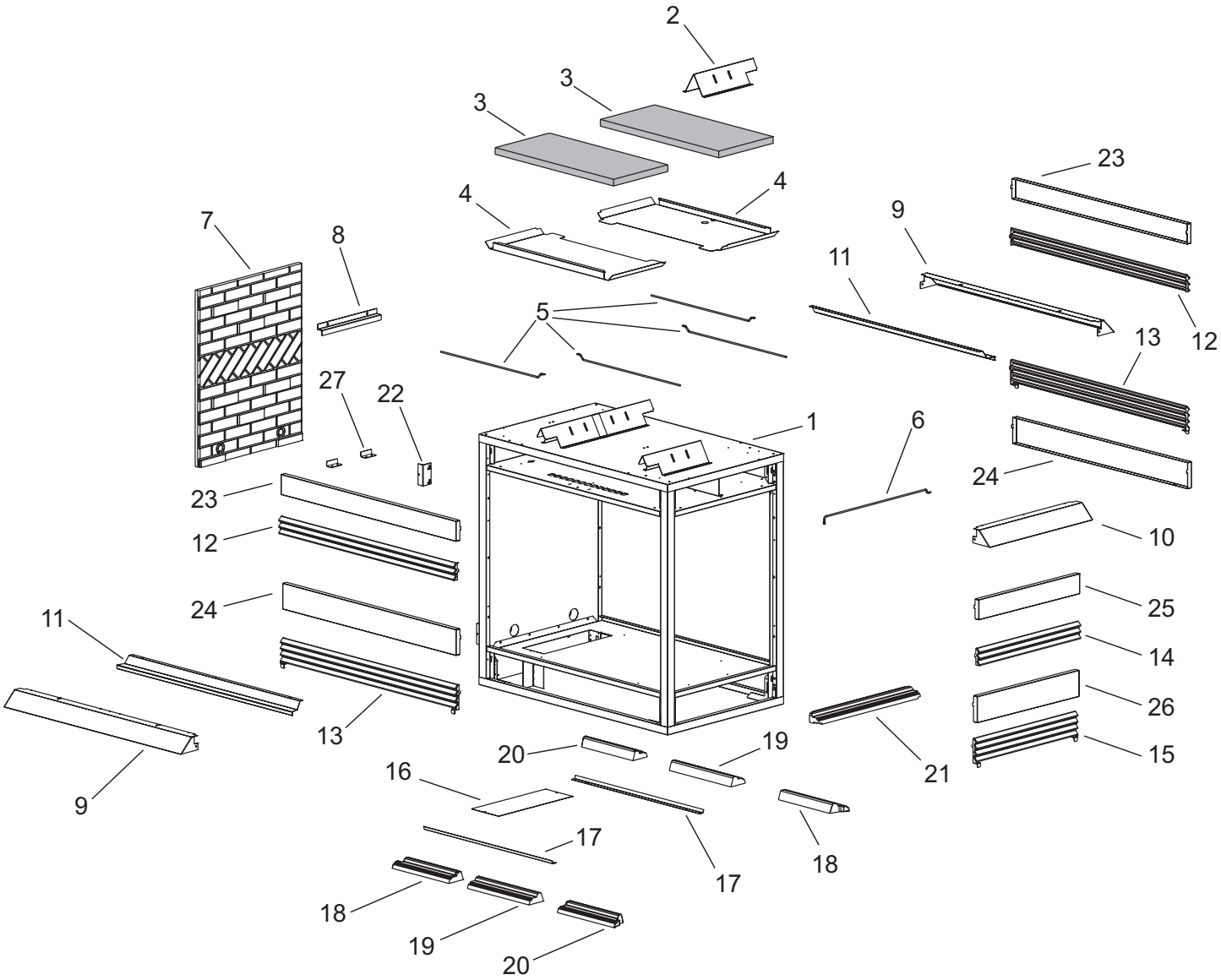

ACCESSORIES

Accessory	Description	Model Numbers
Fan Kit	Designed to provide forced air flow. Note: For use with louvered or flush panel models.	FBB5
Variable Speed Control Kit	Wall mounted variable speed control for use with FBB5 blower	SCV-1
Frame Kits	Standard 3-Piece Frame Kits Black, Brass, Stainless Steel, or Hammered Pewter Extruded Aluminum Frame Kits Black, Brass, Stainless Steel, or Hammered Pewter	For use with See-Through models: VFP36SB2E(L,F) ONLY Contact dealer for all available optional frame kits
Bottom Trim Strip	Available as optional kits in Black, Brass, Hammered Pewter, and Stainless Steel finishes.	For VFP36SB2E(F,L) ONLY Contact dealer for all available optional trim accessories
Standard Hood	Brass hood = BR Stainless Steel = SS Hammered Pewter = HP	Contact dealer for all available optional hood accessories
Accent Light Kit	Optional light kit that installs in top of firebox to enhance logset. Operates with a Rheostat control to vary brightness of light for desired effect.	LK2

ACCESSORIES (continued)

Extended 4" Hoods	Extended hoods that extend out 2" farther than the standard hoods, to accommodate thicker surround materials. Available as optional kits in Black, Brass, Hammered Pewter, and Stainless Steel finishes. Note: Not available for Peninsula open ends.	Contact dealer for all available optional hood accessories
Louvers	Styles include Slat, Mission, Arch, and Leaf Patterns. Available as optional kits in Black, Brass, Hammered Pewter, and Stainless Steel finishes.	Contact dealer for all available optional louver accessories
Decorative Door Kits	Available as optional kits in Black, Brass, Hammered Pewter, and Stainless Steel finishes.	Contact dealer for all available optional frame kit accessories
Decorative Frame Kits	Available as optional kits in Black, Brass, Hammered Pewter, and Stainless Steel finishes.	Contact dealer for all available optional decorative door kit accessories
Mantel Systems	Available in various styles and finishes.	Contact dealer for all available mantel options.
Flush Panel Kits	Flush panel kits may be used to replace louvered panels as desired for the See-Through and Peninsula firebox models. Available in black only.	FPK22 (For Peninsula open end) FPK36 (For See-Through and Peninsula front openings)

HOW TO ORDER REPAIR PARTS

Parts can be ordered through your **service person or dealer.** For best results, the service person or dealer should order parts through the distributor. Parts can be shipped directly to the **service person/dealer.**

All parts listed in the Parts List have a Part Number. When ordering parts, first obtain the Model Number from the name plate on your equipment. Then determine the Part Number (not the Index Number) and the Description of each part from the following appropriate illustration and list. Be sure to give all this information.

Firebox Model Number _____ Part Description _____

Firebox Serial Number _____ Part Number _____

Do not order bolts, screws, washers or nuts. They are standard hardware items and can be purchased at any local hardware store.

Shipments contingent upon strikes, fires and all causes beyond our control.

Empire Comfort Systems
918 Freeburg Avenue
Belleville, Illinois 62220-2623

Web Site: www.empirecomfort.com

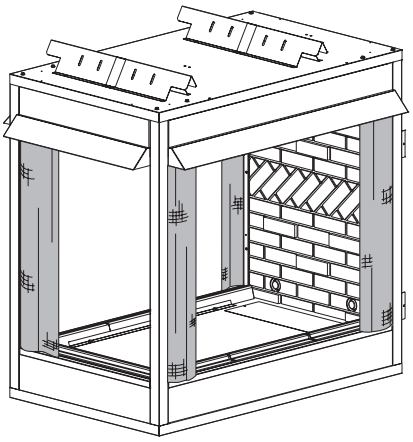

GAS-FIRED
UL LISTED

Premium Vent-Free Universal Fireboxes

SEE-THROUGH FIREBOX MODELS:
VFP36SB2EL-2
VFP36SB2EF-2

PENINSULA FIREBOX MODELS:
VFP36PB2EL-2
VFP36PB2EF-2

36-inch Firebox accomodates the following Log Sets:
Refractory Log Set: LSU-18RR, LSU-24RR, LSU-30RR
Ceramic Fiber Log Set: LSU-18SF, LSU-24SF, LSU-30SF
Banded Brick Liners are made from Ceramic Fiber for rich detail and lasting beauty. Banded Brick Liners have dark "creamed-coffee" bricks with charcoal mortar in running bond courses, plus an accent band of diagonal bricks.

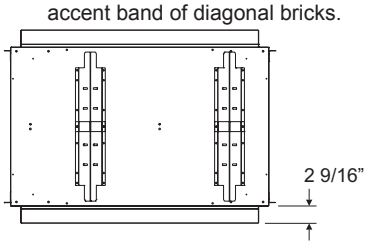

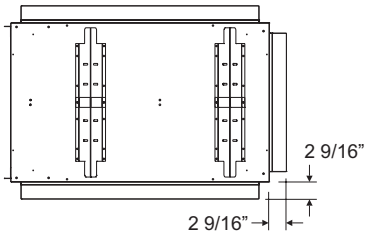

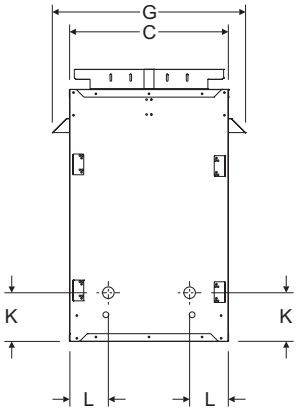

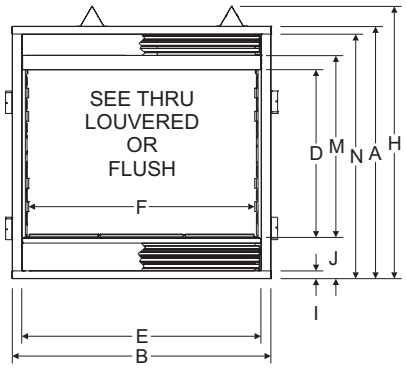

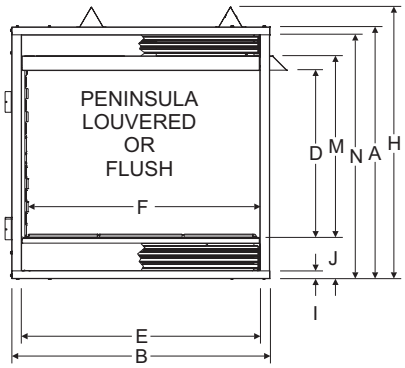

	LOUVERED PANELS		FLUSH PANELS	
	VFP36SB	VFP36PB	VFP36SB	VFP36PB
A	38 1/8"	38 1/8"	38 1/8"	38 1/8"
B	39"	39"	39"	39"
C	24"	24"	24"	24"
D	25 1/2"	25 1/2"	25 1/2"	25 1/2"
E	36"	36"	36"	36"
F	34 1/4"	35 1/4"	34 1/4"	35 1/4"
G	29 1/8"	29 1/8"	29 1/8"	29 1/8"
H	41 1/8"	41 1/8"	41 1/8"	41 1/8"
I	1 1/4"	1 1/4"	1 1/4"	1 1/4"
J	6 1/8"	6 1/8"	6 1/8"	6 1/8"
K	8 1/2"	8 1/2"	8 1/2"	8 1/2"
L	6"	6"	6"	6"
M	27 5/8"	27 5/8"	27 5/8"	27 5/8"
N	36 7/8"	36 7/8"	36 7/8"	36 7/8"

Empire Comfort Systems
918 Freeburg Avenue
Belleville, Illinois 62220-2623

Web Site: www.empirecomfort.com

Premium Vent-Free Universal Fireboxes

SEE-THROUGH FIREBOX MODELS:	PENINSULA FIREBOX MODELS:
VFP36SB2EL-2	VFP36PB2EL-2
VFP36SB2EF-2	VFP36PB2EF-2

Clearances

Combustible material clearance from front of firebox: 36" minimum
Sidewall Clearances: The clearance from the inside of the firebox to perpendicular combustible side wall should not be less than 1 3/4".
Firebox Side and Back Clearances: The firebox outer casing side(s) require a minimum 1/2" clearance to combustibles.
Top Framing and Finishing: Combustible framing may rest on top of standoffs. Combustible finishing materials may extend to the top standoff screws on the front edge of the top outer wrap.
Ceiling Clearances: The ceiling height should not be less than 42" from the top of the hood.
Mantel Clearances: Vent free firebox models must use the hood supplied with the firebox, or one of the optional hood kits available for each model. If a combustible mantel is installed, it must meet the clearance requirements detailed below.
Grate Clearance: The minimum clearance between the front legs of the grate and the front edges of the firebox is 1 1/2".

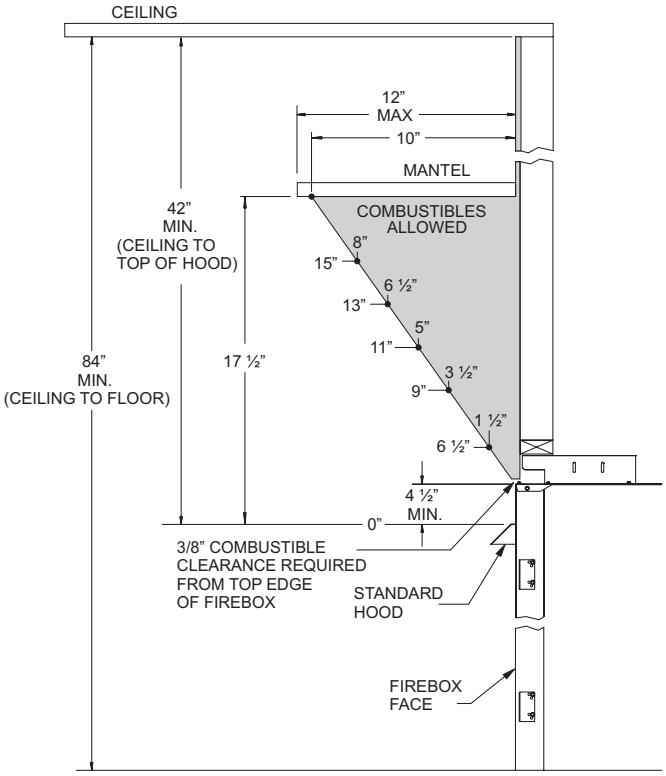

Mantel Clearances with Standard Hood

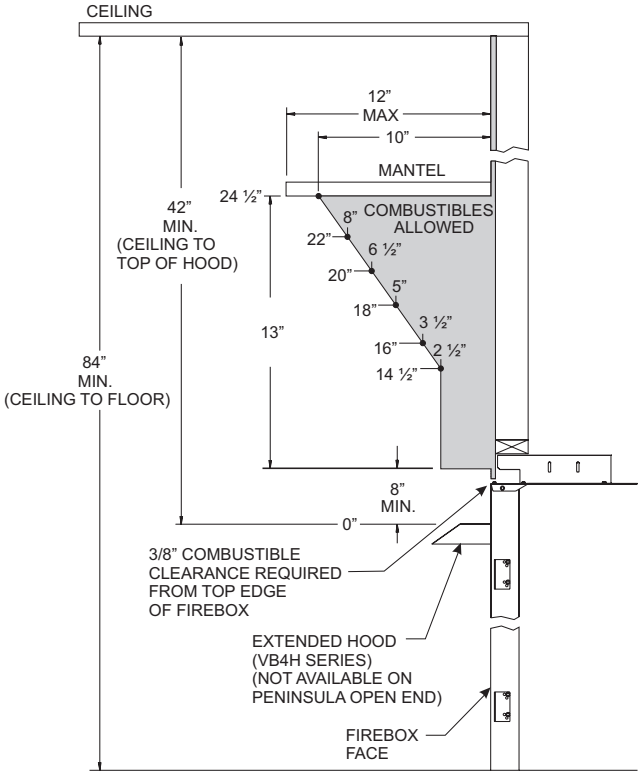

Mantel Clearances with Optional Extended Hood

Empire Comfort Systems
918 Freeburg Avenue
Belleville, Illinois 62220-2623

Web Site: www.empirecomfort.com

Premium Vent-Free Universal Fireboxes

SEE-THROUGH FIREBOX MODELS:

VFP36SB2EL-2
VFP36SB2EF-2

PENINSULA FIREBOX MODELS:

VFP36PB2EL-2
VFP36PB2EF-2

Clearances (continued)

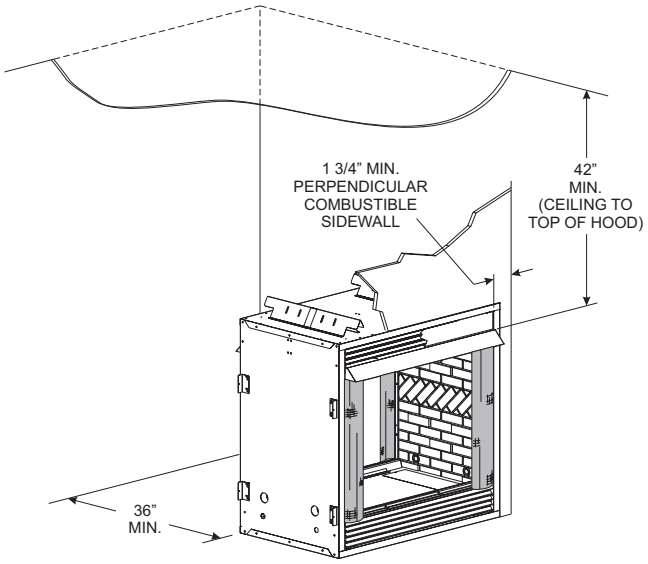

See Through Firebox Clearances

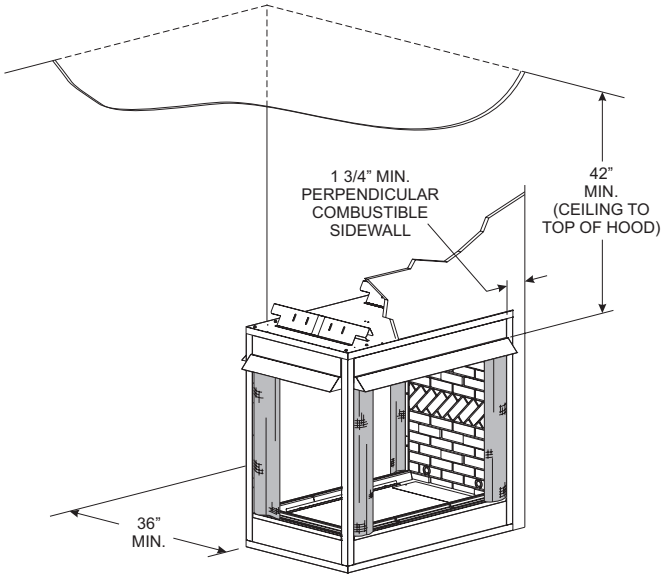

Peninsula Firebox Clearances

Framing

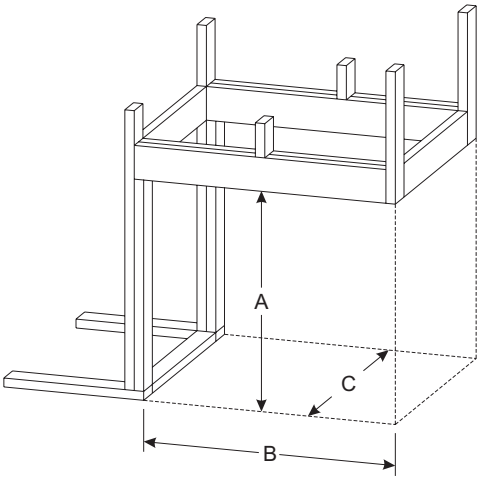

Framing - Peninsula

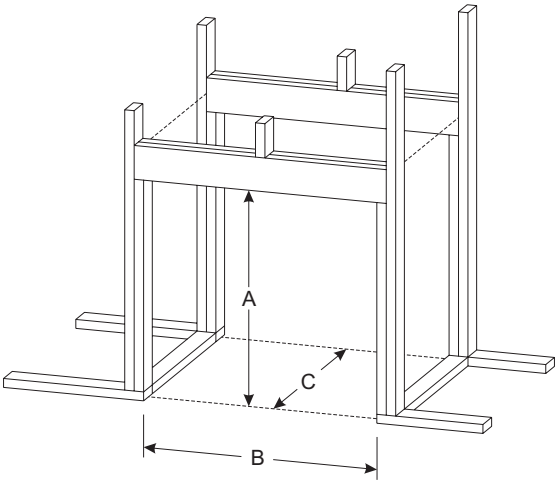

Framing - See-Through

Premium Vent-Free Firebox Framing Dimensions (inches)			
	"A"	"B"	"C"*
Model	Framing Height	Framing Width	Framing Depth
VFP36SB	41 1/2"	40"	23"*
VFP36PB	41 1/2"	39"**	23"*

Attention: Add height of base to "A" Dimension when elevating firebox if installing on an elevated base.

Framing dimension A incudes a three inch clearance for standoffs on firebox.

* Dimension "C" assumes use of 1/2" wall board flush to both front faces.

** Peninsula model framing width assumes use of 1/2" wall board flush to the end face.

SERVICE NOTES

SERVICE NOTES

Empire Comfort Systems Inc.
918 Freeburg Ave. Belleville, IL 62220
PH: 618-233-7420 or 800-851-3153
FAX: 618-233-7097 or 800-443-8648
info@empirecomfort.com

www.empirecomfort.com